Discharge Gas Pulse Dampening

[#1]Ajay Utpat,

[#1]Mechanical Engineering, Pune University, India

ABSTRACT— Gas pulsations are defined presently as a macro flow rate and/or pressure fluctuation with relatively low frequency and high amplitude. They commonly exist in HVACR, energy and other processing industries, and are widely accepted to be mainly caused by PD type gas machinery such as reciprocating or rotary compressors, expanders and Roots type blowers. Moreover, they are believed to be responsible for efficiency fall, system vibrations, noises and fatigue failures. Naturally, as important matters as gas pulsations, there have been tremendous R&D efforts from both academia and industry focused in this area, especially since the late 1980s. The most well-known works are acoustic models based on small perturbation and CFD methods aimed at solving nonlinear unsteady differential equations for pulsating flows. Both approaches have been successful in calculating gas pulsations at off-design conditions of either an under-compression, UC (over-expansion, OE) or over-compression, OC (under-expansion, UE).However, due to the transient nature of pulsation phenomena, some fundamental questions still remain to be answered, such as: What is the physical nature of gas pulsations? What exactly causes them to happen? Where and when are they generated? How are they different from acoustical waves and how to predict their behaviours such as amplitude, travelling direction and speed at source? This paper attempts to answer these questions.It will be further demonstrated that the most dominant gas pulsations are the direct results from either an OC (or UE) or an UC (or OE) suddenly discharging at the compressor or expander outlet. Therefore its location of generation, magnitude, travelling directions and speed can be predicted based on design parameters and operating conditions of those machines.

Keywords— Scroll Compressor, Discharge gas Pulse, Scroll Compressor efficiency.

I. INTRODUCTION

Gas pulsations are believed to be responsible for efficiency fall, system vibrations, noises and fatigue failures in Positive Displacement Gas Machines.

1.1. PD Type Gas Machinery:-

Application and Classification PD (Positive Displacement) type compressors convert the shaft energy into the gas internal energy by trapping a fixed amount of gas into a cavity, then compressing and discharging it into the outlet pipe. They are capable of generating medium to high pressures for a wide range of flows. Therefore they are widely used in various applications, such as in pipeline transport of purified natural gas from production site to consumers thousands of miles away or in industrial plants for compressed air supply or in refrigeration and air conditioning equipment in refrigerant cycles. On the other hand, PD type expanders convert the gas internal energy back to the shaft energy by an opposite cycle of the compressor. They are gaining markets and popularity as a global energy conservation trend drives the need by replacing throttling devices to recover energy that otherwise would be exhausted. For some applications, the role of compressing or expanding can even be changed back and forth according to system needs.

There are a wide variety of PD compressors and expanders depending on the specific shape, movements and operating principles or applications. A common classification, as shown in Figure 1, is based on the mechanism used to move the gas by dividing them into two general types: a rotary type as is used in screw or scroll and a reciprocating type as is used in piston or diaphragm. In spite of the different drive motions and cavity forming shapes, they commonly possess a suction port, a volume changing cavity and a discharge port where a valve controls the timing of the release of gas media. Moreover, they are all cyclic in nature and have the same compression or expansion cycle for the processed gas.

As an example, Figures 2a-2d show the compression cycle of a typical screw compressor. Gas flows into the compressor as the cavity on the suction side opens and traps the gas, which is then being compressed as the cavity volume is reduced. After a desired compression ratio or volume reduction ratio is reached, the discharge port opens and gas flows out of the discharge into the outlet system.

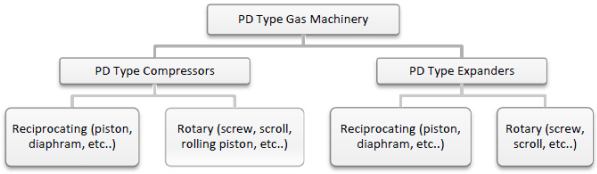

Figure 1: Classification for PD type fluid machinery

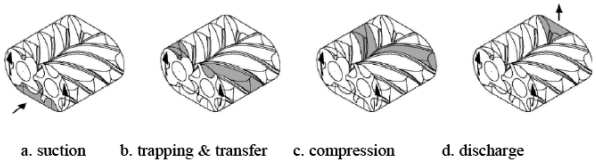

Figure 2: Compression cycle of a screw

1.2. Gas Pulsations and Their Adverse Impacts-

Gas pulsations are currently defined as a macro flow rate and/or pressure fluctuation with relatively low frequency and high amplitude. Since PD compressors or expanders divide the incoming gas stream mechanically into parcels of cavity size for energy transfer and delivery to the discharge, they inherently generate pulsations with cavity passing frequency at discharge, and the pulsation amplitudes are especially significant under high operating pressures or at off-design conditions of either an under-compression, UC (over-expansion, OE) or over-compression, OC (under-expansion, UE).

An UC (or OE) happens when the pressure at the discharge (system back pressure) is greater than the pressure of the compressed gas within the cavity just before the opening. This would result in a rapid backflow into the cavity, a pulsed gas flow, according to the conventional theory.

On the other hand, an OC (or UE) takes place when pressure at discharge is less than pressure inside the cavity, causing a rapid forward flow of the gas into the discharge system.

All fixed pressure ratio compressors or expanders suffer from UC, OC or OE, UE due to the mis-match of the fixed design pressure and ever-changing system pressures and operating conditions.

An extreme case of UC is the Roots type compressor (or expander) where there is no internal compression (or expansion) at all, or a perfect 100% UC (OE). So for Roots, pulsations always exist and pulsation magnitude is directly proportional to the pressure difference between inlet and outlet. This pressure difference at discharge is believed to be responsible, at least as one of the main sources, for generating large amplitude gas pulsations in the discharge flow. They are gas borne and travel through the downstream piping system and if left uncontrolled, could potentially damage pipe line, in-line equipment's, and excite severe vibrations and noises according to Price et al (1999) and Tweten et al (2008).

For this reason, Positive Displacement compressors are often cited unfavourably with high pulsation induced NVH and low efficiency at off-design when compared with dynamic types like the centrifugal compressor. At the same time, the ever stringent NVH regulations from the government and growing public awareness of the comfort level in residential and office applications have given rise to the urgent need for quieter and more efficient Positive Displacement compressors.

1.3. Present Pulsation Studies and Methods

Naturally, as important matters as gas pulsations, there have been tremendous R&D efforts from both academia and industry made in this area, especially since the late 1980s.

The most well-known works are acoustic models based on small perturbations and CFD methods aimed at solving nonlinear differential equations for unsteady flows. Mujiü (2007) gives an excellent survey of the key observations since the 1980s. In summary, Koai and Soedel (1990) developed an acoustic model in which they analyzed an idealized low pulsation in a screw compressor and investigated how it was related to compressor performance. They noticed that the gas pulsations as a function of the discharge pressure have a minimum value. The results were also confirmed later by Sangfors (1999) and Wu et al (2004) using CFD modeling of gas pulsations in screw compressor discharge port.

Moreover, according to Wu et al (2004), this minimum corresponds to the theoretical design point where the discharge pressure matches the compressor built-in volume ratio, while Koai and Soedel (1990) claimed that this minimum does not correspond exactly to the design pressure, and Gavric (2000) and Sangfors (1999) pointed out that it coincides with a small deviation towards under-compression. At off-design volume ratios, all the above authors reported that the pressure difference (or conditions of OC or UC) between the compressor cavity and the discharge chamber at the start of the discharge process is the most important factor in gas pulsations. Sangfors (1999) and Wu et al (2004) also observed that the amplitude of the pressure pulsations during the discharge process increases with the rotational speed. It should be noted that the acoustic model, though partially successful as mentioned above, may over-simplify the gas pulsation phenomena by assuming that there are no mean through-flows and perturbations are relatively small in magnitude compared with mean value.

On the other hand, CFD simulations that target non-linear differential equations may be too mathematically focused to reveal the physical characteristics of industrial gas pulsations. So even today, more fundamental questions remain to be answered such as: What is the true nature of gas pulsations? What exactly causes them to happen? Where and when are they generated? How to predict their behaviours such as amplitude, travelling direction and speed?

ANALYSIS OF GAS PULSATION IN SCROLL COMPRESSOR -

A common source for noise in many positive displacement type compressors is the oscillatory flow of discharge gas through the discharge porting. This is especially true for hermetic scroll compressors with low side type shells (most of shell interior at suction pressure) due to the relatively small region within the shell for the discharge gas path. Consequently, there is limited space for muffling the discharge flow pulsations. In light of this potential for noise, and in the interest of improving other aspects of compressor performance, it is very important to gain an understanding of the discharge flow dynamics. Analytical modelling is a very good approach to gaining this understanding, as well as producing a tool which can enable the design engineer to improve upon the dynamic behaviour of the discharge process.

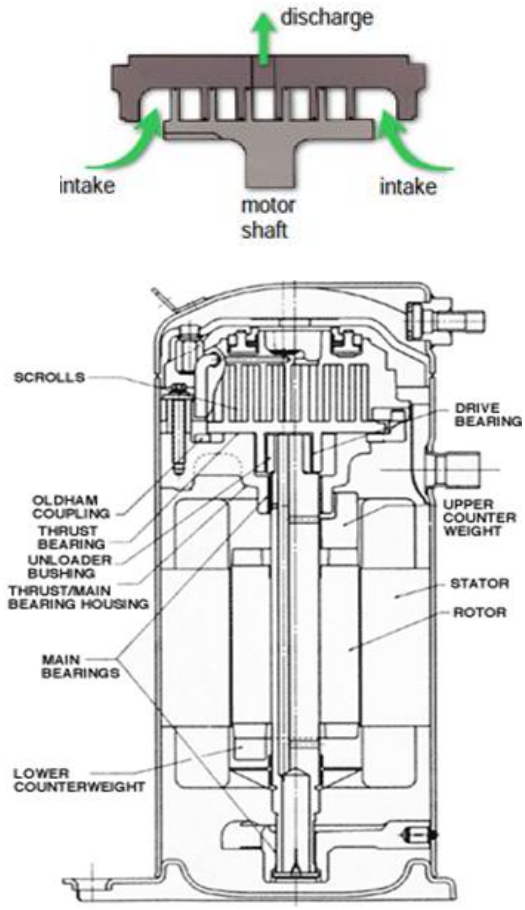

Components of Scroll Compressor

Fig. 3

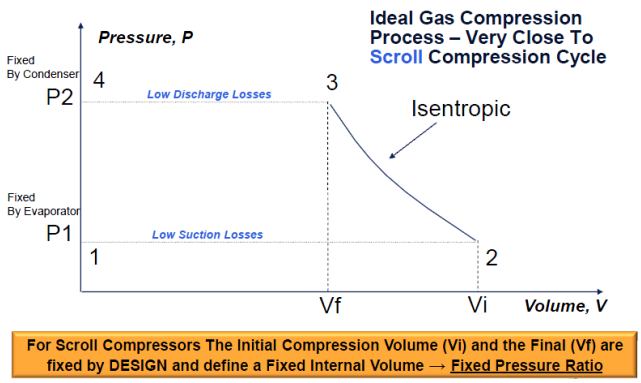

1.4. Dynamic Operating Conditions & Discharge Process –

The Operating condition of a refrigeration cycle is typically specified in terms of temperatures. Compressors are designed to operate at a variety of conditions. The range of operating conditions for a family of compressors is specified on a plot of evaporator temperature and condenser temperature, called an operating envelop.

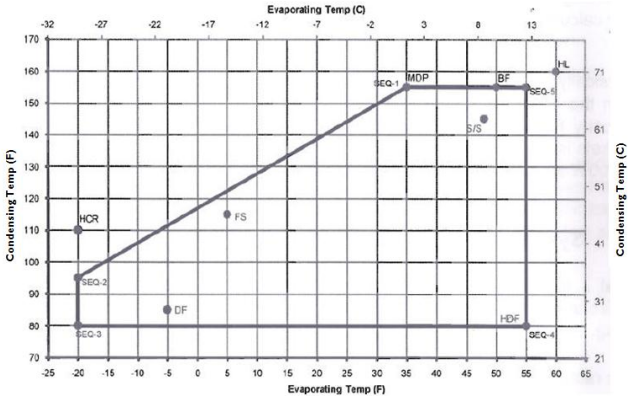

An Under compression, UC (or OE) happens when the pressure at the discharge (system back pressure) is greater than the pressure of the compressed gas within the cavity just before the opening. This would result in a rapid backflow into the cavity, a pulsed gas flow.

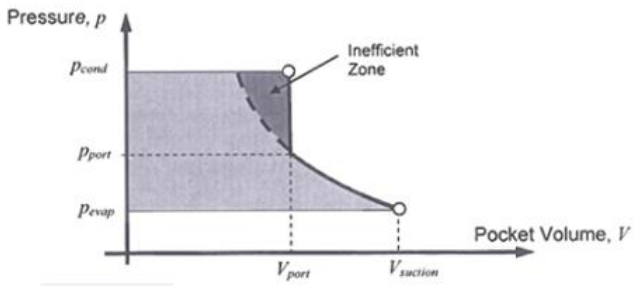

p-V Diagram of an Under-Compression Process

On the other hand, an Over Compression, OC (or UE) takes place when pressure at discharge is less than pressure inside the cavity, causing a rapid forward flow of the gas into the discharge system.

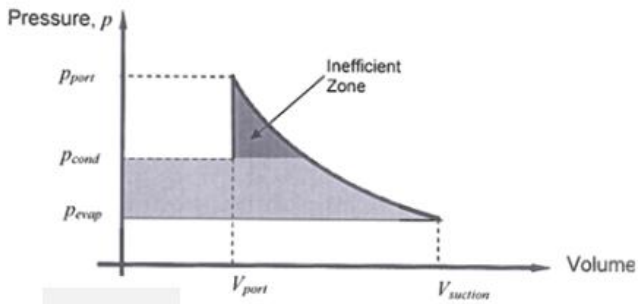

p-V Diagram of an Over-Compression Process

All fixed pressure ratio compressors or expanders suffer from UC, OC or OE, UE due to the mis-match of the fixed design pressure and ever-changing system pressures and operating conditions.

REASON FOR INNOVATION -

Several undesirable effects of pressure fluctuations appear in the piping system and/or the equipment connected to the compressor or within the compressor itself. All of these undesirable effects are due to discharge pulsations which appear as a result of pulsating action of the compressing means such nested disks, a piston, or the like. A major drawback which arises from discharge pulsations is the effect of vibration such as rattling which appears in the piping system and/or other equipment connected to the compressor, and can potentially damage the piping system and/or the equipment connected to the compressor. Under severe conditions of pulsating flow the vibration/rattling is frequently accompanied by considerable noise, which radiates from the piping system. High discharge pulsations can also considerably decrease the efficiency of the compressor.

In order to absorb or dampen out the pressure fluctuations, oversized piping system is typically used. However, oversizing the piping system results in heavier pipes, which can lead to maintenance issues and cost escalation. Another alternative is to provide a discharge cavity at the outlet of the compressing means whereby the volume of the cavity facilitates reduction in discharge pulsations. However, in order to provide a discharge cavity, the size of the shell/housing of the compressor needs to be increased thereby making the compressor heavy, difficult to service and occupy more space. Additionally, a discharge muffler is typically coupled to the outlet of the compressor to attenuate discharge pulsations generated by the compressor. However, acoustic characteristics of the discharge muffler are extremely important in achieving efficient pulsation dampening. Furthermore, existing discharge mufflers may share a large partition with the suction/inlet portion of the compressor. The high temperature of the discharge muffler can transfer heat to the inlet portion of the compressor and decrease the efficiency potential of the compressor

Hence there is a need for a mechanism that can effectively dampen discharge pulsations while occupying less space and increasing the efficiency of the compressor.

PULSE DAMPENING MECHANISM -

Pulsation dampening assembly for compressors to dampening discharge pressure pulsations occurring because of discontinued nature of compressed refrigerant flow is depicted in below picture.

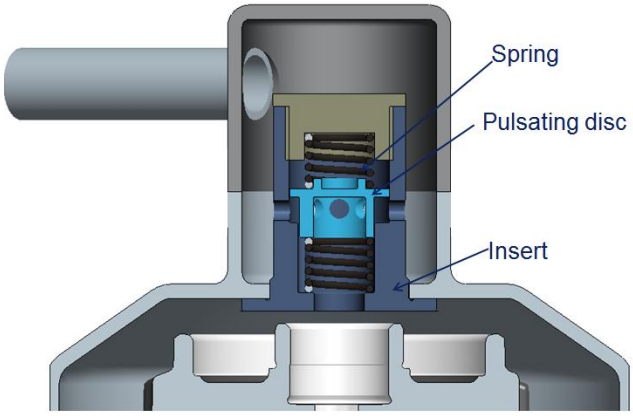

The assembly is disposed in an outlet port configured in a housing of a compressor. The assembly comprises a cylindrically shaped insert comprising a through-hole in the wall of the insert, a pair of helical springs co-axially spaced apart within the through-hole and a pulsating disc positioned between the pair of helical springs in the through-hole. Compressed refrigerant discharged from a compressing means of the compressor hits the pulsating disc and pushes it against the spring force. The pulsating force exerted by discharged refrigerant will be opposed by the springs and the pulsation energy will be absorbed by the springs thereby reducing discharge pulsations.

1.5. Positive cycle pulse-

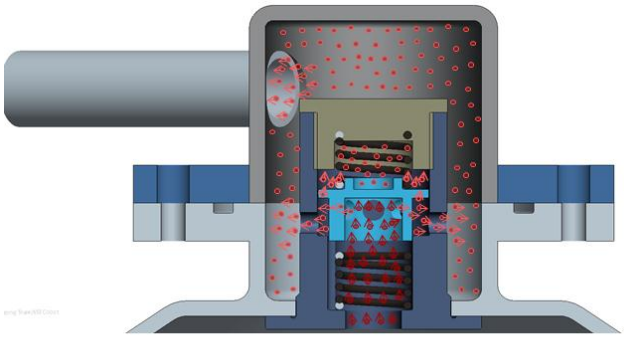

POSETIVE PREESURE PULSE

During Positive pressure pulse cycle compressed refrigerant discharged from a compressing means of the compressor hits the pulsating disc and pushes it against the top spring force.

1.6. Negative cycle pulse-

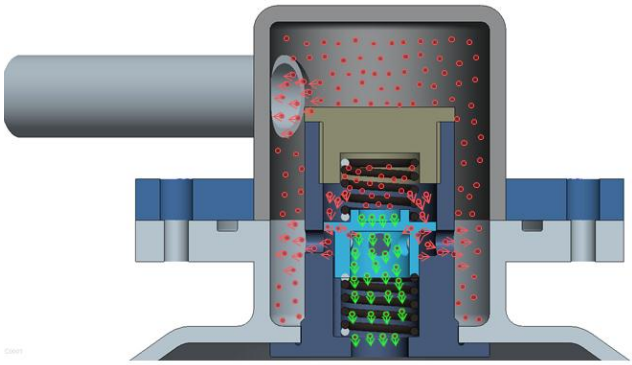

NEGATIVE PRESSURE PLULSE

During Negative pressure pulse cycle compressed refrigerant discharged from a compressing means of the compressor hits the pulsating disc and pushes it against the bottom spring force.

1.7. Laboratory testing-

Test Objective :-
To evaluate reduction in Discharge Pulse with Pulse dampener at selected operating points.

Test procedure

1. Standard HBT ZP34K5E-PFV (Existing HBT to be used) will be tested to baseline performance…….
2. Pulse & Sound testing With Dampener HBT will be tested for Discharge Pulse rating for selected conditions……. (3 points)
3. Pulse & Sound Testing – Standard HBT with Top cap will be tested for performance rating…….. (3 Points)
4. Pulse & Sound Testing – HBT With Small Top cap and insert……(3 points)

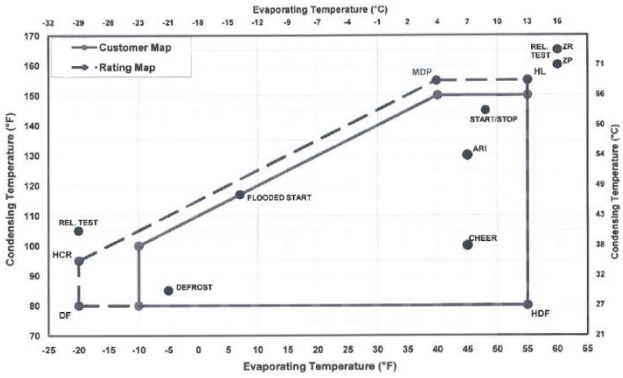

II. TESTING RESULTS& CONCLUSION

Operating Points	ARI (45/130)	CHEER (45/100)	CHEER (50/100)	(55/150)	(50/115)	(40/150)	(-10/100)	(-10/80)	(30/110)	(45/130)
PARAMETERS	% Variation	% Variation	% Variation	% Variation	% Variation	% Variation	% Variation	% Variation	% Variation	% Variation
MASS FLOW	2.57	1.22	0.92	2.58	1.05	5.11	12.24	10.82	3.72	3.29
HEAT CAPACITY	2.57	1.22	0.92	2.58	1.05	5.11	12.28	10.82	3.72	3.29
EER	3.21	2.03	1.45	3.12	0.98	5.86	13.12	10.92	4.50	3.95
CURRENT	-0.76	-0.20	-0.40	-0.44	0.09	-0.65	-0.49	0.00	-0.97	-0.21
POWER	-0.63	-0.79	-0.53	-0.50	0.06	-0.63	-0.75	-0.06	-0.79	-0.60

Minimum gain in EER (Energy Efficiency Ratio) = 1%
Maximum gain in EER = 13%
Minumum gain in Heat Capacity = 0.92%
Maximum gain in Heat Capacity = 12%
Minimum gain in Mass Flow = 0.92%
Maximum gain in Mass Flow = 12%
Furthermore, power consumption is also reduced.

Thus the results clearly indicate improved performance of the pulsation dampening assembly of the present dislcosure.

III. REFERENCES

Sontag Richard E.,VanWylen Gordon, J.: Introduction to Thermodynamics Classical and Statistical, Third Edition, John Wiley & Sons, New York, 1991.
Baumeister Theodore, Avallone Eugene, A., Marks' Standard Handbook for Mechanical Engineers, Eight Edition, McGraw-Hill Book Company, New York, 1978.
Anderson, J., 1982, Modern Compressible Flow, McGraw-Hill Book Company, New York, p. 172–205. Beranek, L., 1988, Noise & Vibration Control, Inst. of Noise Control Engineer, New York, p. 396.
Gavric, L., Badie-Cassagnet, A., 2000, Measurement of gas pulsations in discharge and suction lines of refrigerant compressors, The 2000 International Compressor Engineering Conference at Perdue, p. 627-634.
Koai, K., Soedel, W., 1990, Determination of port flow and interpretation of periodic volume source, The 1990 International Compressor Engineering Conference at Perdue, p. 369-377.

